FA51-10U

Data Sheet

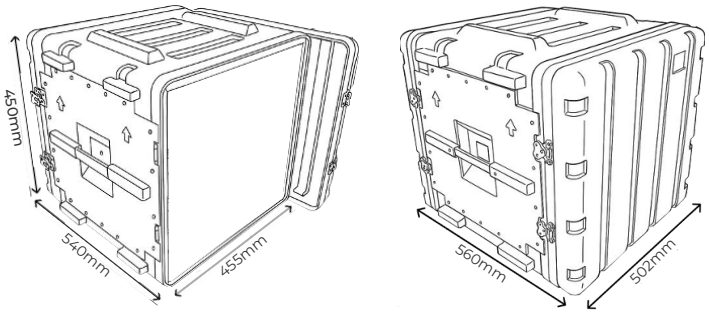

GENERAL INFORMATION

Model	FA51-10U
ID	10315862
Brand	Audibax
EAN	8436850181040
Colour	Black
Intrastat	42021219
Country of Origin	China

GENERAL SPECIFICATIONS

Category	Rack Case
Type of Case	PE
External Dimensions (Width x Height x Depth)	560 x 498 x 502 mm
Internal Dimensions (Width x Height x Depth)	540 x 450 x 455 mm
Rack Units (RU)	10U

PHYSICAL INFORMATION

IP Rating	IP20
Weight Single	9,4 Kg
Lenght Master	575 mm
Height Master	525 mm
Width Master	565 mm

PHYSICAL INFORMATION

Hardware & Fittings (Handles, Locks, Hinges)	4 High-security butterfly locks on each lid
Removable Covers (Front/Rear/Top)	2 Removable side covers
Accessibility & Ease of Use	Easy open lids
Handles & Grip Options	Dual handles for heavy loads
Stackability & Storage Features	Reinforced corners for secure stacking
Recommended Equipment & Applications	Professional audio equipment (mixers, amplifiers)
Customization Options & Modular Design	Modular systems for integration
Transport & Storage Recommendations	Avoid exposure to extreme shocks and vibrations
Safety Guidelines & Precautions	Secure all covers and latches before moving
Packaging Type & Material	Reinforced cardboard

WHAT IS IN THE BOX

1 x FA51-10U
1 x Screw set